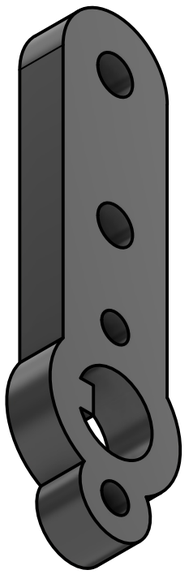

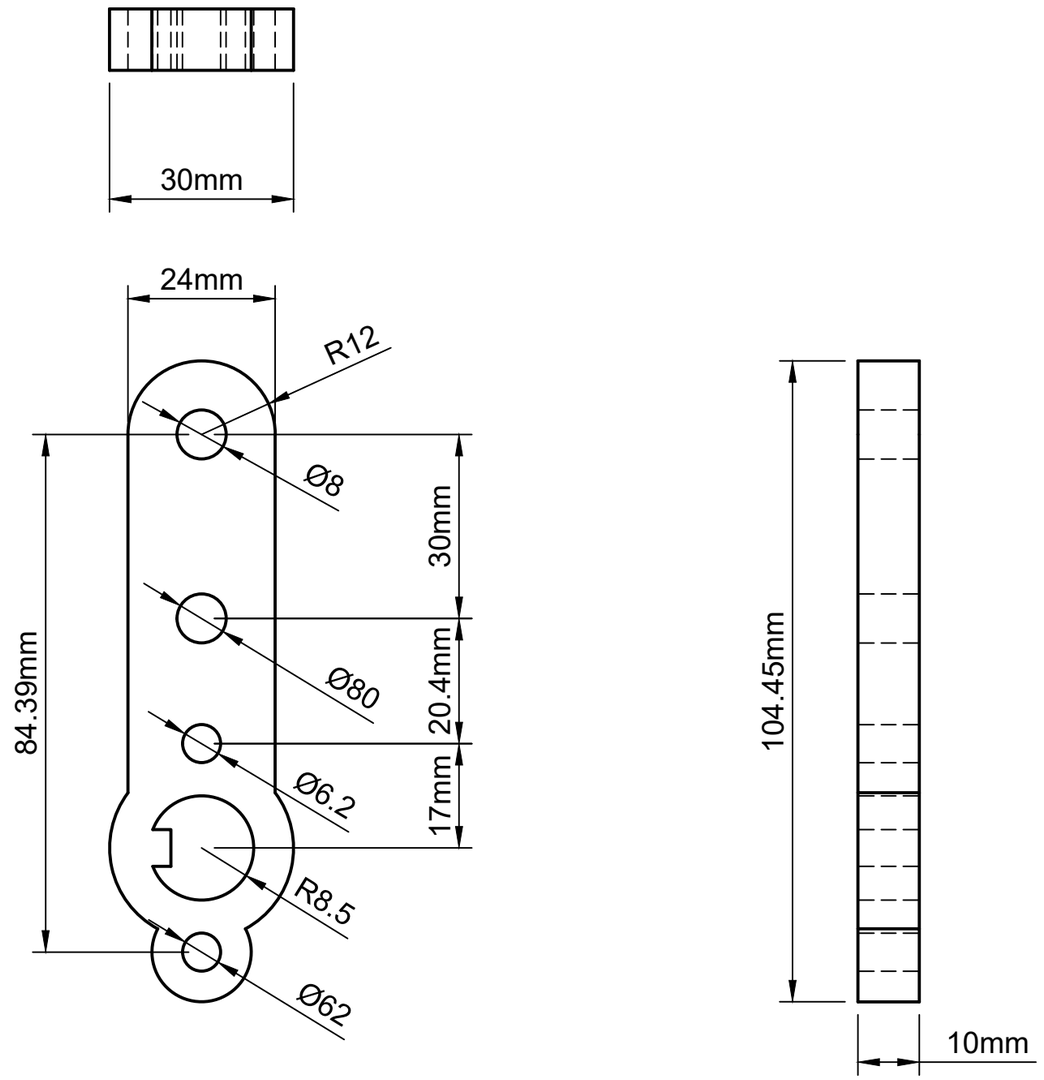

Dept.	Technical reference	Created by	Approved by
		Johnder Telemin Morales 3/16/2026	
		Document type	Document status
		Title Bielas Motor	DWG No.
			Rev. / Date of issue / Sheet 1/2

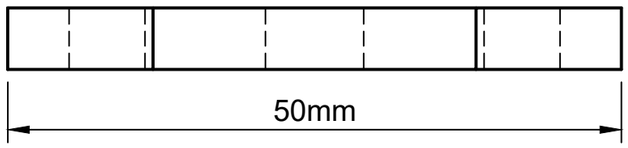

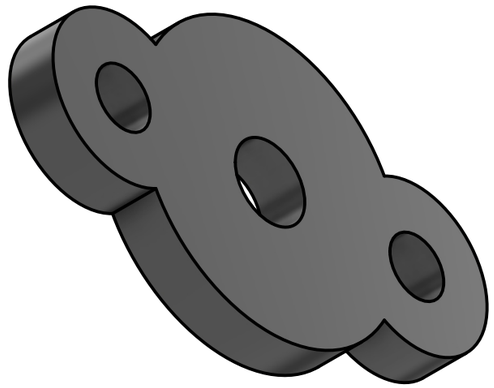

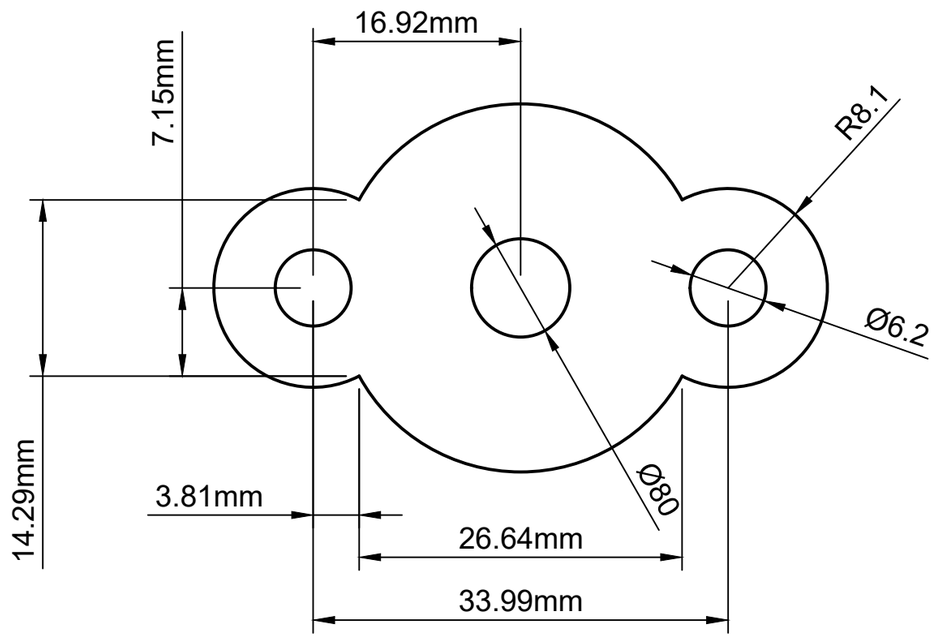

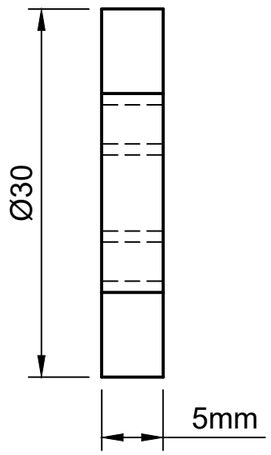

Dept.	Technical reference	Created by Johnder Telemin Morales 3/16/2026	Approved by	
		Document type	Document status	
		Title Bielas Motor	DWG No.	
			Rev. / Date of issue	Sheet 2/2